TECHNICAL UNIVERSITY OF KOŠICE
FACULTY OF ELECTRICAL ENGINEERING AND INFORMATICS
Department of Electrical Power Engineering

Solving technical problems in open power electricity market of Slovak Republic

Ing. Matúš Novák, 1st year of PhD. study

Supervisor: prof. Ing. Michal Kolcun, PhD.

Power system stability classification

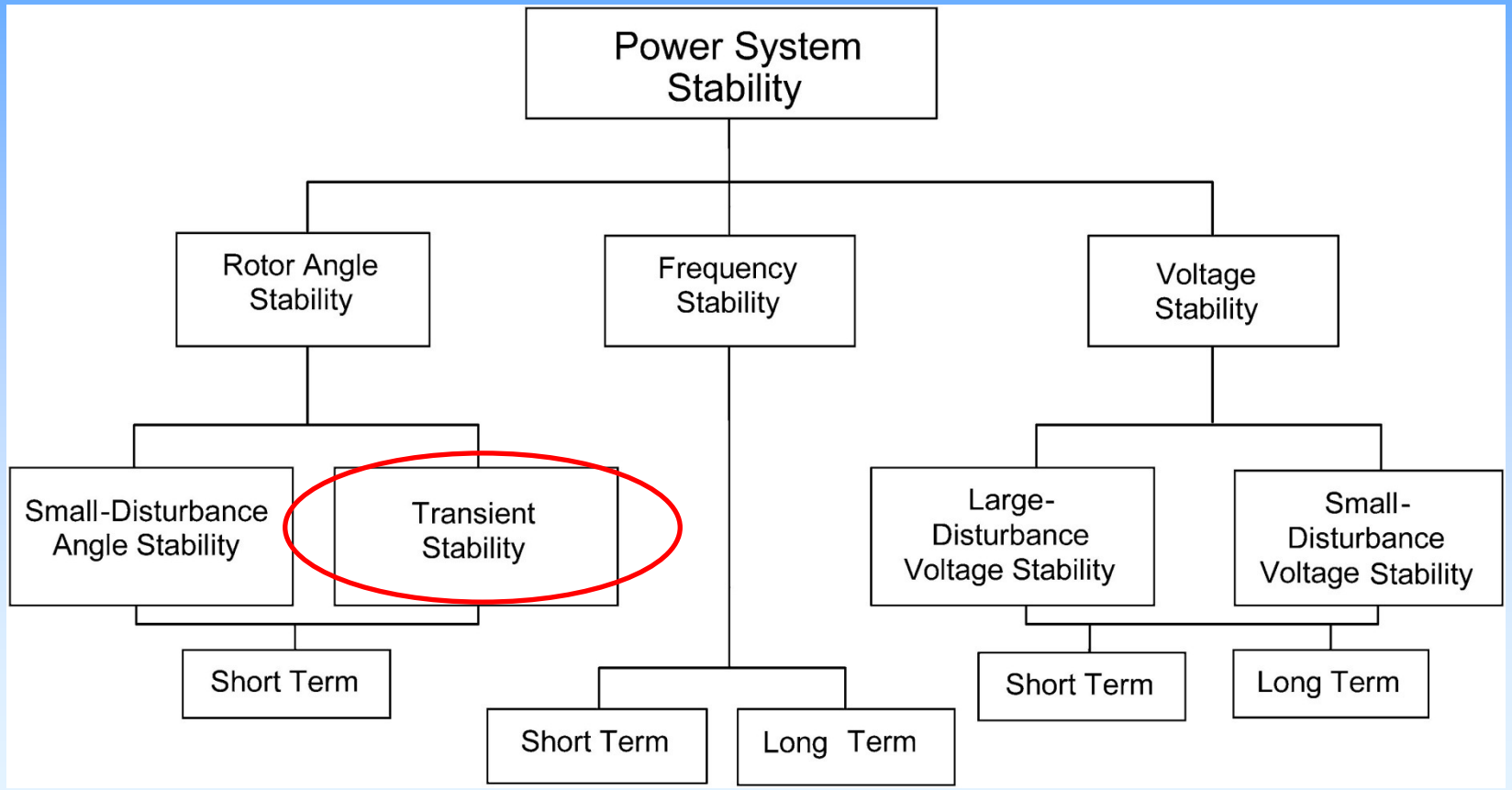

Slovenská elektrizačná prenosová sústava, a. s.

Prenosová sústava Slovenskej republiky
Power System of The Slovak Republic

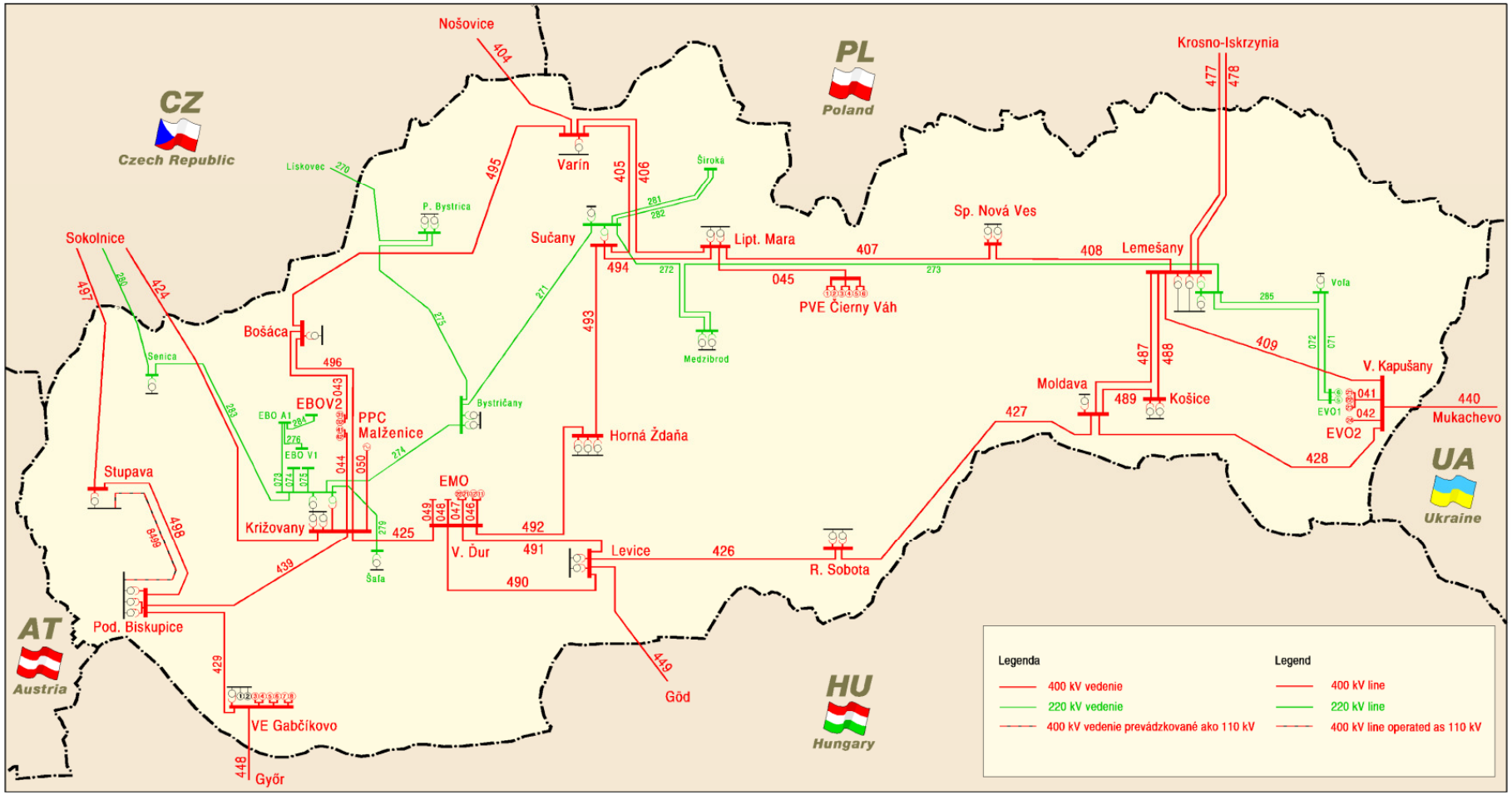

Stav ku dňu: 31. 12. 2011

Vyhotovil: Ing. Milan Straka,

SEPS, a. s. Odbor sieťových výpočtov

Technická spolupráca: sféra, a. s., grafický systém Matik®.NET

Slovenská elektrizačná prenosová sústava, a.s.

Mlynské nivy 59/A

824 84 Bratislava 26

www.sepsas.sk

Few facts about Slovak grid

- Installed power is about 7100 MW
- Peak load of SR (winter 2011): 4279 MW (1.2.2011 9:00)
- Generation mostly placed in western part
- Transit country for power from north to south

RES in Slovakia

- RES connected to network (until 30.6.2011): SPP - **480MW,** from this:
  - Western part of SR (ZSEd): 104MW
  - Middle part of SR (SSEd): 242MW
  - Eastern part of SR (VSD): 133 MW
- WPP – **3 MW**
- SWP – **70,16 MW**

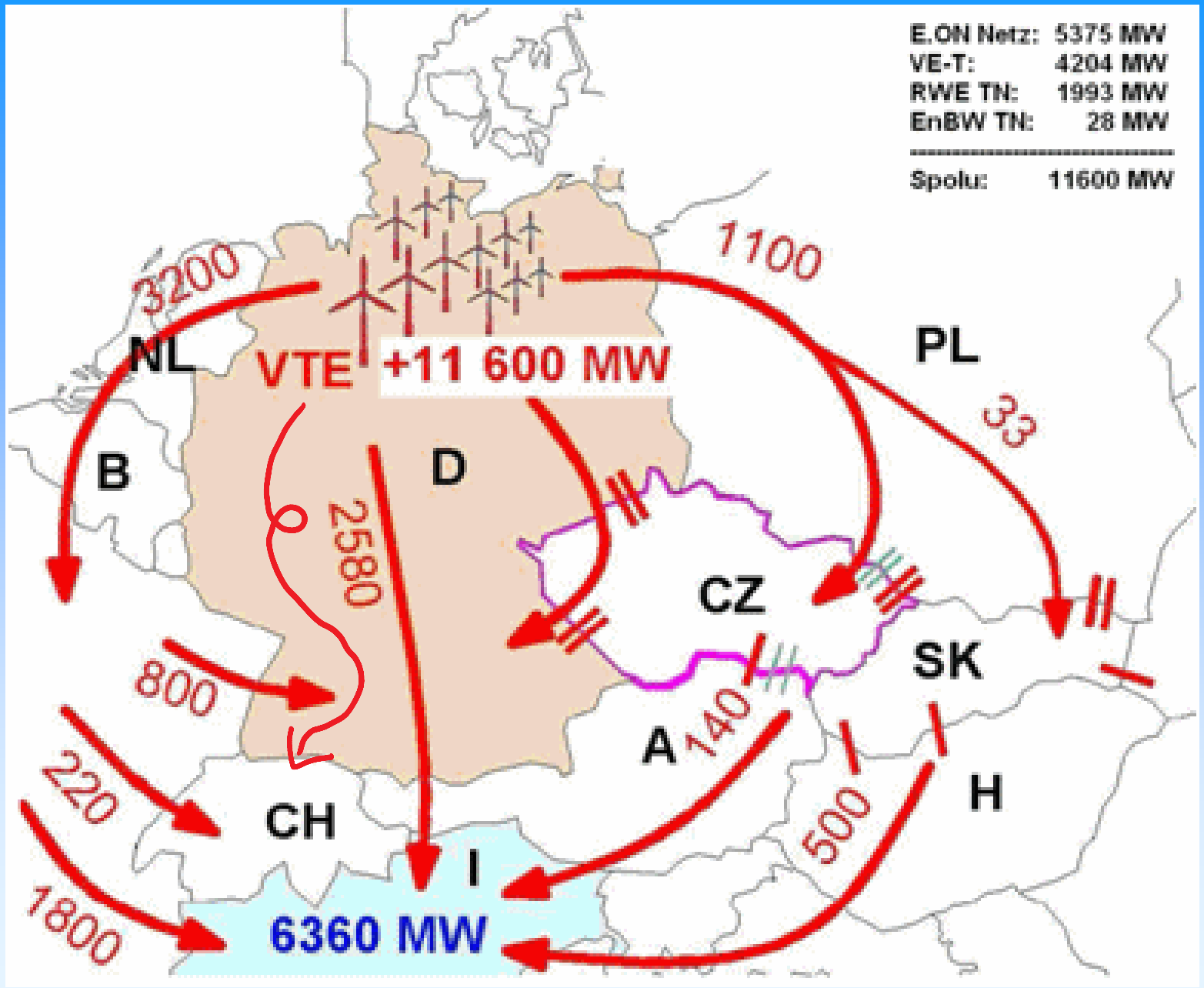

Impact of increased production of wind power plants to power flows from north to south on 11.november 2004 at 19:00

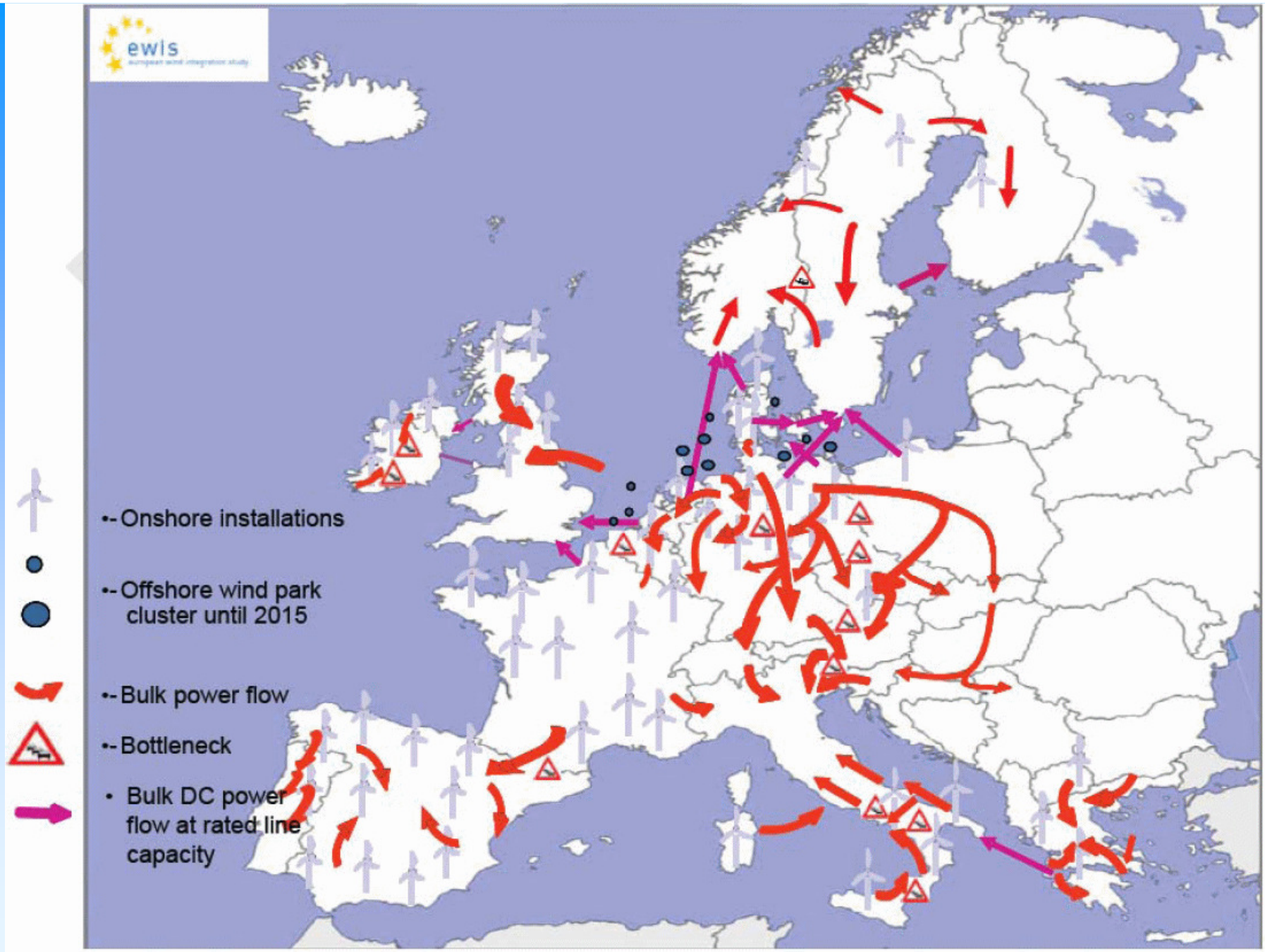

Illustration of expected power flows in 2015 caused by wind power plants.

Thank you for your attention!